Work Order ID 73362

Wednesday, August 31, 2011 11:39:10 AM

Item ID: D3913-041 **Accept** **Setup Start**

Revision ID: **Stop**

Item Name: Long Basket Base Assemby, 350

Start Date: 8/31/2011 **Start Qty:** 1.00 **Cust Item ID:**

Required Date: 9/12/2011 **Req'd Qty:** 1.00 **Customer:**

Reference:

Approvals: **Process Plan:** CL **Date:** 11/08/31 **Tooling:** _____ **Date:** _____ **Run Start**

QC: _____ **Date:** _____ **SPC (Y/N):** _____ **Date:** _____ **Stop**

Sequence ID/ Work Center ID	Operation Description	Set Up/ Run Hours	Tool ID	Tool #	Plan Code	Accept Qty	Reject Qty	Reject Number	Insp. Stamp

Draw Nbr	Revision Nbr
D3913	A
D4020	A

100 Weld per dwg A/R S.S. rod Batch: M114649 0.00

Large Fab

Large Fab

Large Fab

Memo 0.00

1- assemble ribs , weld as per dwg D3913 using DT9610A
inspect before welding mesh
2-Cut D4020-1 base mesh and tack weld all mesh on basket as per dwg D3913 and trim mesh to fit if necessary and trim to clear fasteners holes on the ends
3- weld hinge (3) and Mounting brackets as per dwg D3913
take lid to locate hinge and bracket

Ass. Lid on Base

Cd 11.09.22 MB-11/09/22

110 QC9- Inspect visual per QSI004- Fusion Welds 0.00

QC

Quality Control

Memo 0.00

11.09.23

Dart Aerospace Ltd

W/O:		WORK ORDER CHANGES					
DATE	STEP	PROCEDURE CHANGE	By	Date	Qty	Approval Chief Eng / Prod Mgr	Approval QC Inspector

Part No: _____ **PAR #:** _____ **Fault Category:** _____ **NCR:** Yes No **DQA:** _____ **Date:** _____

Resolution: _____ **Disposition:** _____ **QA: N/C Closed:** _____ **Date:** _____

NCR:		WORK ORDER NON-CONFORMANCE (NCR)						
DATE	STEP	Description of NC Section A	Corrective Action Section B			Verification Section C	Approval Chief Eng	Approval QC Inspector
			Initial Chief Eng	Action Description Chief Eng	Sign & Date			

NOTE: Date & initial all entries

H:\fFORMS\Quality Assurance\approved QA\NCRWO RevE

Work Order ID 73362

Wednesday, August 31, 2011 11:39:10 AM

Item ID: D3913-041 **Accept** **Setup Start** **Stop**

Revision ID:

Item Name: Long Basket Base Assemby, 350

Start Date: 8/31/2011 **Start Qty:** 1.00 **Cust Item ID:**

Required Date: 9/12/2011 **Req'd Qty:** 1.00 **Customer:**

Reference:

Run Start **Stop**

Approvals: **Process Plan:** _____ **Date:** _____ **Tooling:** _____ **Date:** _____

QC: _____ **Date:** _____ **SPC (Y/N):** _____ **Date:** _____

Sequence ID/ Work Center ID	Operation Description	Set Up/ Run Hours	Tool ID	Tool #	Plan Code	Accept Qty	Reject Qty	Reject Number	Insp. Stamp
120	QC6- Inspect dimensions to drawing	0.00							
QC	Memo	0.00							
Quality Control									
125	Pressure Wash per QSI005 4.3	0.00							
HandFinish	Memo	0.00							
Hand Finishing									

8 4/09/23

IX Ø m-L 4/09/26

Dart Aerospace Ltd

W/O:		WORK ORDER CHANGES					
DATE	STEP	PROCEDURE CHANGE	By	Date	Qty	Approval Chief Eng / Prod Mgr	Approval QC Inspector

Part No: _____ **PAR #:** _____ **Fault Category:** _____ **NCR:** Yes No **DQA:** _____ **Date:** _____

Resolution: _____ **Disposition:** _____ **QA: N/C Closed:** _____ **Date:** _____

NCR:		WORK ORDER NON-CONFORMANCE (NCR)						
DATE	STEP	Description of NC Section A	Corrective Action Section B			Verification Section C	Approval Chief Eng	Approval QC Inspector
			Initial Chief Eng	Action Description Chief Eng	Sign & Date			

NOTE: Date & initial all entries

H:\FORMS\Quality Assurance\approved QA\NCRWO RevE

Work Order ID 73362

Wednesday, August 31, 2011 11:39:10 AM

Item ID: D3913-041 **Accept** **Setup Start**

Revision ID: **Stop**

Item Name: Long Basket Base Assemby, 350

Start Date: 8/31/2011 **Start Qty:** 1.00 **Cust Item ID:**

Required Date: 9/12/2011 **Req'd Qty:** 1.00 **Customer:**

Reference:

Run Start

Approvals: **Process Plan:** _____ **Date:** _____ **Tooling:** _____ **Date:** _____

Stop

QC: _____ **Date:** _____ **SPC (Y/N):** _____ **Date:** _____

Sequence ID/ Work Center ID	Operation Description	Set Up/ Run Hours	Tool ID	Tool #	Plan Code	Accept Qty	Reject Qty	Reject Number	Insp. Stamp
130	White Gloss(Ref:4.3.5.2) per QSI005 4.3-Steel	0.00				1X	Ø	M-L	11/09/26
Powdercoat	**Memo**	0.00							
Powder Coating	1- Plug holes and mask only interior of hinge (3) prior to powder coat 1ST COAT: START TIME: 11:15 OVEN TEMPERATURE: 400 oF FINISH TIME: 11:45 ********** 2nd coat if necessary ********** 2ND COAT: START TIME: _____ OVEN TEMPERATURE: _____ FINISH TIME: _____								
M118439									
140	QC3- Inspect Part Finish	0.00				1	Ø	M	11/09/26
QC	**Memo**	0.00							
Quality Control									

Dart Aerospace Ltd

W/O:		WORK ORDER CHANGES					
DATE	STEP	PROCEDURE CHANGE	By	Date	Qty	Approval Chief Eng / Prod Mgr	Approval QC Inspector

Part No: _____ **PAR #:** _____ **Fault Category:** _____ **NCR:** Yes No **DQA:** _____ **Date:** _____

Resolution: _____ **Disposition:** _____ **QA: N/C Closed:** _____ **Date:** _____

NCR:		WORK ORDER NON-CONFORMANCE (NCR)						
DATE	STEP	Description of NC Section A	Corrective Action Section B			Verification Section C	Approval Chief Eng	Approval QC Inspector
			Initial Chief Eng	Action Description Chief Eng	Sign & Date			

NOTE: Date & initial all entries

H:\FORMS\Quality Assurance\approved QA\NCRWO RevE

Work Order ID 73362

Wednesday, August 31, 2011 11:39:10 AM

Item ID: D3913-041 **Accept** **Setup Start**

Revision ID:

Item Name: Long Basket Base Assemby, 350 **Stop**

Start Date: 8/31/2011 **Start Qty:** 1.00 **Cust Item ID:**

Required Date: 9/12/2011 **Req'd Qty:** 1.00 **Customer:**

Reference:

Approvals: **Process Plan:** _____ **Date:** _____ **Tooling:** _____ **Date:** _____ **Run Start**

QC: _____ **Date:** _____ **SPC (Y/N):** _____ **Date:** _____ **Stop**

Sequence ID/ Work Center ID	Operation Description	Set Up/ Run Hours	Tool ID	Tool #	Plan Code	Accept Qty	Reject Qty	Reject Number	Insp. Stamp
150	Assemble as per dwg	0.00							
HandFinish	Memo	0.00				88	11-09-26		
Hand Finishing	Pick Kit								
160	QC5- Inspect part completeness to step on W/O	0.00							
QC	Memo	0.00	8 11/09/30						
Quality Control									
170	Identify as per dwg & Stock Location w/o	0.00	D4030-041/B73356			1	0	11/09/29	
Packaging	Memo	0.00							
Packaging									

Dart Aerospace Ltd

W/O:		WORK ORDER CHANGES					
DATE	STEP	PROCEDURE CHANGE	By	Date	Qty	Approval Chief Eng / Prod Mgr	Approval QC Inspector

Part No: _____ **PAR #:** _____ **Fault Category:** _____ **NCR:** Yes No **DQA:** _____ **Date:** _____

Resolution: _____ **Disposition:** _____ **QA: N/C Closed:** _____ **Date:** _____

NCR:		WORK ORDER NON-CONFORMANCE (NCR)						
DATE	STEP	Description of NC Section A	Corrective Action Section B			Verification Section C	Approval Chief Eng	Approval QC Inspector
			Initial Chief Eng	Action Description Chief Eng	Sign & Date			

NOTE: Date & initial all entries

H:\FORMS\Quality Assurance\approved QA\NCRWO RevE

Work Order ID 73362

Wednesday, August 31, 2011 11:39:10 AM

Item ID: D3913-041 **Accept** **Setup Start**

Revision ID:

Item Name: Long Basket Base Assemby, 350 **Stop**

Start Date: 8/31/2011 **Start Qty:** 1.00 **Cust Item ID:**

Required Date: 9/12/2011 **Req'd Qty:** 1.00 **Customer:**

Reference:

Approvals: **Process Plan:** _____ **Date:** _____ **Tooling:** _____ **Date:** _____ **Run Start**

QC: _____ **Date:** _____ **SPC (Y/N):** _____ **Date:** _____ **Stop**

Sequence ID/ Work Center ID	Operation Description	Set Up/ Run Hours	Tool ID	Tool #	Plan Code	Accept Qty	Reject Qty	Reject Number	Insp. Stamp
180	QC21- Final Inspection - Work Order Release	0.00							
QC	Memo	0.00					n	10	3
Quality Control									

MF
11-09-30

Dart Aerospace Ltd

W/O:		WORK ORDER CHANGES					
DATE	STEP	PROCEDURE CHANGE	By	Date	Qty	Approval Chief Eng / Prod Mgr	Approval QC Inspector

Part No: _____ **PAR #:** _____ **Fault Category:** _____ **NCR:** Yes No **DQA:** _____ **Date:** _____

Resolution: _____ **Disposition:** _____ **QA: N/C Closed:** _____ **Date:** _____

NCR:		WORK ORDER NON-CONFORMANCE (NCR)						
DATE	STEP	Description of NC Section A	Corrective Action Section B			Verification Section C	Approval Chief Eng	Approval QC Inspector
			Initial Chief Eng	Action Description Chief Eng	Sign & Date			

NOTE: Date & initial all entries

H:\fFORMS\Quality Assurance\approved QA\NCRWO RevE

Picklist Print

Wednesday, August 31, 2011 11:39:07 AM

Work Order ID: 73362

Parent Item: D3913-041

Parent Item Name: Long Basket Base Assemby, 350

Start Date: 8/31/2011 **Required Date:** 9/12/2011

Start Qty: 1.00 **Required Qty:** 1.00

Comments: IPP Rev:A new issue DD 10.03.19 verified by:EC IPP Rev:B
chg qty's DD 10.04.12 verified by:EC

Component Item ID/ Item Name	Replacement Item ID	Mfg/ Purch	Bin Item	Primary Location	Last Location	Route Seq ID	Unit of Measure	Qty on Hand	Qty per Kit	Total Qty	Qty Issued	Date Issued	Status
D2581		Manufactured	No			100	Each	19.0000	2	2			
Mounting Bracket													
				Location			**Loc Qty**		**Loc Code**				
				WA			19						
					69258		14			2			
					69739		2						
					70766		3						
D3913-1		Manufactured	No			100	Each	5.0000	1	1			
Rib													
				Location			**Loc Qty**		**Loc Code**				
				WA			5						
					59089		1						
					69260		2						
					70346		1						
					72086		1			1			
D3913-15		Manufactured	No			100	Each	7.0000	1	1			
Wide Handle Plate													
				Location			**Loc Qty**		**Loc Code**				
				WA			3						
					69647		3			1			
				WA005			4						
					69012		1						
					72550		3						

Dart Aerospace Ltd

W/O:		WORK ORDER CHANGES					
DATE	STEP	PROCEDURE CHANGE	By	Date	Qty	Approval Chief Eng / Prod Mgr	Approval QC Inspector

Part No: _____ **PAR #:** _____ **Fault Category:** _____ **NCR:** Yes No **DQA:** _____ **Date:** _____

Resolution: _____ **Disposition:** _____ **QA: N/C Closed:** _____ **Date:** _____

NCR:		WORK ORDER NON-CONFORMANCE (NCR)						
DATE	STEP	Description of NC Section A	Corrective Action Section B			Verification Section C	Approval Chief Eng	Approval QC Inspector
			Initial Chief Eng	Action Description Chief Eng	Sign & Date			

NOTE: Date & initial all entries

H:\fFORMS\Quality Assurance\approved QA\NCRWO RevE

Picklist Print

Wednesday, August 31, 2011 11:39:07 AM

Work Order ID: 73362

Parent Item: D3913-041

Parent Item Name: Long Basket Base Assemby, 350

Start Date: 8/31/2011 **Required Date:** 9/12/2011

Start Qty: 1.00 **Required Qty:** 1.00

D3913-3	Manufactured	No	100	Each	5.0000	1	1	
Rib								

Location	Loc Qty	Loc Code
WA	4	
69160	1	
72664	3	
WA006	1	
69646	1	

D3913-7	Manufactured	No	100	Each	12.0000	2	2	
Rib								

Location	Loc Qty	Loc Code
WA	4	
69521	2	
70334	2	
WA006	8	
65278	1	
66435	1	
72457	6	

D3913-9	Manufactured	No	100	Each	5.0000	1	1	
Hinge Rib								

Location	Loc Qty	Loc Code
WA	3	
72665	3	
WA006	2	
70138	1	
71479	1	

Dart Aerospace Ltd

W/O:		WORK ORDER CHANGES					
DATE	STEP	PROCEDURE CHANGE	By	Date	Qty	Approval Chief Eng / Prod Mgr	Approval QC Inspector

Part No: _____ **PAR #:** _____ **Fault Category:** _____ **NCR:** Yes No **DQA:** _____ **Date:** _____

Resolution: _____ **Disposition:** _____ **QA: N/C Closed:** _____ **Date:** _____

NCR:		WORK ORDER NON-CONFORMANCE (NCR)						
DATE	STEP	Description of NC Section A	Corrective Action Section B			Verification Section C	Approval Chief Eng	Approval QC Inspector
			Initial Chief Eng	Action Description Chief Eng	Sign & Date			

NOTE: Date & initial all entries

H:\fFORMS\Quality Assurance\approved QA\NCRWO RevE

Picklist Print

Wednesday, August 31, 2011 11:39:07 AM

Work Order ID: 73362

Parent Item: D3913-041

Parent Item Name: Long Basket Base Assemby, 350

Start Date: 8/31/2011 **Required Date:** 9/12/2011

Start Qty: 1.00 **Required Qty:** 1.00

D3916-041	Manufactured	No	100	Each	6.0000	2	2	
Rib Assembly								

Location	Loc Qty	Loc Code
WA	6	
69161	2	
72543	4	

D3916-5	Manufactured	No	100	Each	13.0000	3	3	
Light Rib								

Location	Loc Qty	Loc Code
WA	4	
59088	3	
71938	1	
WA006	9	
72557	9	

D4016-1	Manufactured	No	100	Each	31.0000	3	3	
Hinge Half, Base								

Location	Loc Qty	Loc Code
WA	31	
66418	0	
68426	3	
72009	10	
72757	18	

Dart Aerospace Ltd

W/O:		WORK ORDER CHANGES					
DATE	STEP	PROCEDURE CHANGE	By	Date	Qty	Approval Chief Eng / Prod Mgr	Approval QC Inspector

Part No: _____ **PAR #:** _____ **Fault Category:** _____ **NCR:** Yes No **DQA:** _____ **Date:** _____

Resolution: _____ **Disposition:** _____ **QA: N/C Closed:** _____ **Date:** _____

NCR:		WORK ORDER NON-CONFORMANCE (NCR)						
DATE	STEP	Description of NC Section A	Corrective Action Section B			Verification Section C	Approval Chief Eng	Approval QC Inspector
			Initial Chief Eng	Action Description Chief Eng	Sign & Date			

NOTE: Date & initial all entries

H:\FORMS\Quality Assurance\approved QA\NCRWO RevE

Picklist Print

Wednesday, August 31, 2011 11:39:07 AM

Work Order ID: 73362

Parent Item: D3913-041

Parent Item Name: Long Basket Base Assemby, 350

Start Date: 8/31/2011 **Required Date:** 9/12/2011

Start Qty: 1.00 **Required Qty:** 1.00

D4017-7	Manufactured	No	100	Each	6.0000	1	1	
Rib								

Location	Loc Qty	Loc Code	
WA	2		
69730	1		
72556	1		
WA005	4		
72008	1		1
72964	3		

D4017-9	Manufactured	No	100	Each	8.0000	2	2	
Rib								

Location	Loc Qty	Loc Code	
WA	8		
70341	2		
72554	6		2

D4020-11	Manufactured	No	100	Each	2.0000	2	2	
End Mesh, Basket								

Location	Loc Qty	Loc Code	
WA	2		72636 → 2
69648	2		

D4021-1	Manufactured	No	100	Each	15.0000	3	3	
Handle Plate								

Location	Loc Qty	Loc Code	
WA	15		
69518	6		
69777	9		3

Dart Aerospace Ltd

W/O:		WORK ORDER CHANGES					
DATE	STEP	PROCEDURE CHANGE	By	Date	Qty	Approval Chief Eng / Prod Mgr	Approval QC Inspector

Part No: _____ **PAR #:** _____ **Fault Category:** _____ **NCR:** Yes No **DQA:** _____ **Date:** _____

Resolution: _____ **Disposition:** _____ **QA: N/C Closed:** _____ **Date:** _____

NCR:		WORK ORDER NON-CONFORMANCE (NCR)						
DATE	STEP	Description of NC Section A	Corrective Action Section B			Verification Section C	Approval Chief Eng	Approval QC Inspector
			Initial Chief Eng	Action Description Chief Eng	Sign & Date			

NOTE: Date & initial all entries

H:\FORMS\Quality Assurance\approved QA\NCRWO RevE

Picklist Print

Wednesday, August 31, 2011 11:39:08 AM

Work Order ID: 73362

Parent Item: D3913-041

Parent Item Name: Long Basket Base Assemby, 350

Start Date: 8/31/2011 **Required Date:** 9/12/2011

Start Qty: 1.00 **Required Qty:** 1.00

D4034-041	Manufactured	No	100	Each	1.0000	1	1	
Aft Upper Rib Assembly								

Location	Loc Qty	Loc Code
WA006	1	
69157	1	

D4034-043	Manufactured	No	100	Each	1.0000	1	1	
Fwd Upper Rib Assembly								

Location	Loc Qty	Loc Code
WA006	1	
70241	1	

M304EX0.75-16F	Purchased	No	100	sf	747.4220	33	33	
Expanded Metal Flat SS								

Location	Loc Qty	Loc Code
WA	747.421955	
115012	95	
117197	102.9036	
117455	16.0341	
117896	53.3264	
118153	88.3763	
118248	33.0983	
118450	87.583255	
118597	271.1	33

AN3-10A	Purchased	No	150	Each	102.0000	6	6	
Bolt								

Location	Loc Qty	Loc Code
ST351	102	
117795	102	6x

Dart Aerospace Ltd

W/O:		WORK ORDER CHANGES					
DATE	STEP	PROCEDURE CHANGE	By	Date	Qty	Approval Chief Eng / Prod Mgr	Approval QC Inspector

Part No: _____ **PAR #:** _____ **Fault Category:** _____ **NCR:** Yes No **DQA:** _____ **Date:** _____

Resolution: _____ **Disposition:** _____ **QA: N/C Closed:** _____ **Date:** _____

NCR:		WORK ORDER NON-CONFORMANCE (NCR)						
DATE	STEP	Description of NC Section A	Corrective Action Section B			Verification Section C	Approval Chief Eng	Approval QC Inspector
			Initial Chief Eng	Action Description Chief Eng	Sign & Date			

NOTE: Date & initial all entries

H:\fFORMS\Quality Assurance\approved QA\NCRWO RevE

Picklist Print

Wednesday, August 31, 2011 11:39:08 AM

Work Order ID: 73362

Parent Item: D3913-041

Parent Item Name: Long Basket Base Assemby, 350

Start Date: 8/31/2011 **Required Date:** 9/12/2011

Start Qty: 1.00 **Required Qty:** 1.00

AN960JD8	NAS1149DN832J	Purchased	No	M117887	150	Each	0.0000	2	2	SP
Washer										
D2931		Manufactured	No		150	Each	594.0000	2	2	SP
Bumper										

Location	Loc Qty	Loc Code	
ST504	594		
46064	594		2x

D4021-5		Manufactured	No	B 73478 2x	150	Each	0.0000	2	2	SP.
Blanking Plate										
MS20600-AD4W3		Purchased	No		150	Each	1,497.000	2	2	SP 11-09-26.
Cherry Rivets										

Location	Loc Qty	Loc Code	
GA	958		
118626	958		~~5~~ 2x
ST321	406		
111636	48		
117505	323		
117601	35		
WA018	133		
107939	133		

Dart Aerospace Ltd

W/O:		WORK ORDER CHANGES					
DATE	STEP	PROCEDURE CHANGE	By	Date	Qty	Approval Chief Eng / Prod Mgr	Approval QC Inspector

Part No: _____ **PAR #:** _____ **Fault Category:** _____ **NCR:** Yes No **DQA:** _____ **Date:** _____

Resolution: _____ **Disposition:** _____ **QA: N/C Closed:** _____ **Date:** _____

NCR:		WORK ORDER NON-CONFORMANCE (NCR)						
DATE	STEP	Description of NC Section A	Corrective Action Section B			Verification Section C	Approval Chief Eng	Approval QC Inspector
			Initial Chief Eng	Action Description Chief Eng	Sign & Date			

NOTE: Date & initial all entries

H:\fFORMS\Quality Assurance\approved QA\NCRWO RevE

Picklist Print

Wednesday, August 31, 2011 11:39:08 AM

Work Order ID: 73362

Parent Item: D3913-041

Parent Item Name: Long Basket Base Assemby, 350

Start Date: 8/31/2011 **Required Date:** 9/12/2011

Start Qty: 1.00 **Required Qty:** 1.00

MS21042L3	Purchased	No	150	Each	1,777.000	6	6	SD

Nut

Location	Loc Qty	Loc Code	
ST300	1777		
117441	160		
117601	400		6x
117885	217		
118451	1000		

NAS1149F0332P	Purchased	No	150	Each	174.0000	12	12	SD 11-09-26

WASHER

Location	Loc Qty	Loc Code	
ST275	174		
117735	75		
118354	96		12x
17317	3		

Dart Aerospace Ltd

W/O:		WORK ORDER CHANGES					
DATE	STEP	PROCEDURE CHANGE	By	Date	Qty	Approval Chief Eng / Prod Mgr	Approval QC Inspector

Part No: _____ **PAR #:** _____ **Fault Category:** _____ **NCR:** Yes No **DQA:** _____ **Date:** _____

Resolution: _____ **Disposition:** _____ **QA: N/C Closed:** _____ **Date:** _____

NCR:		WORK ORDER NON-CONFORMANCE (NCR)						
DATE	STEP	Description of NC Section A	Corrective Action Section B			Verification Section C	Approval Chief Eng	Approval QC Inspector
			Initial Chief Eng	Action Description Chief Eng	Sign & Date			

NOTE: Date & initial all entries

ITEM	QTY -041	P/N	DESCRIPTION
	X	D3913-041	LONG BASKET BASE ASSY (350)
1	1	D3913-101	TUBULAR ASSY (350 SHORT BASKET)
2	1	D3913-15	WIDE HANDLE PLATE
3	2	D2581	MOUNTING BRACKET
4	2	D2931	BUMPER
5	3	D4016-1	HINGE HALF, BASE
6	1	D4020-1	MESH (350 BASKET LONG BASE)
7	2	D4020-11	END MESH, BASKET
8	3	D4021-1	HANDLE PLATE
9	2	D4021-5	BLANKING PLATE
10	6	AN3-10A	BOLT
11	2	AN960JD8	WASHER
12	2	MS20600AD4W3	BLIND RIVET
13	6	MS21042L3	NUT
14	12	NAS1149F0332P	WASHER

SHOP COPY
RETURN TO
ENGINEERING
UNCONTROLLED COPY
SUBJECT TO AMENDMENT
WITHOUT NOTICE
WORK ORDER
NO. 73362
CL 11/08/31

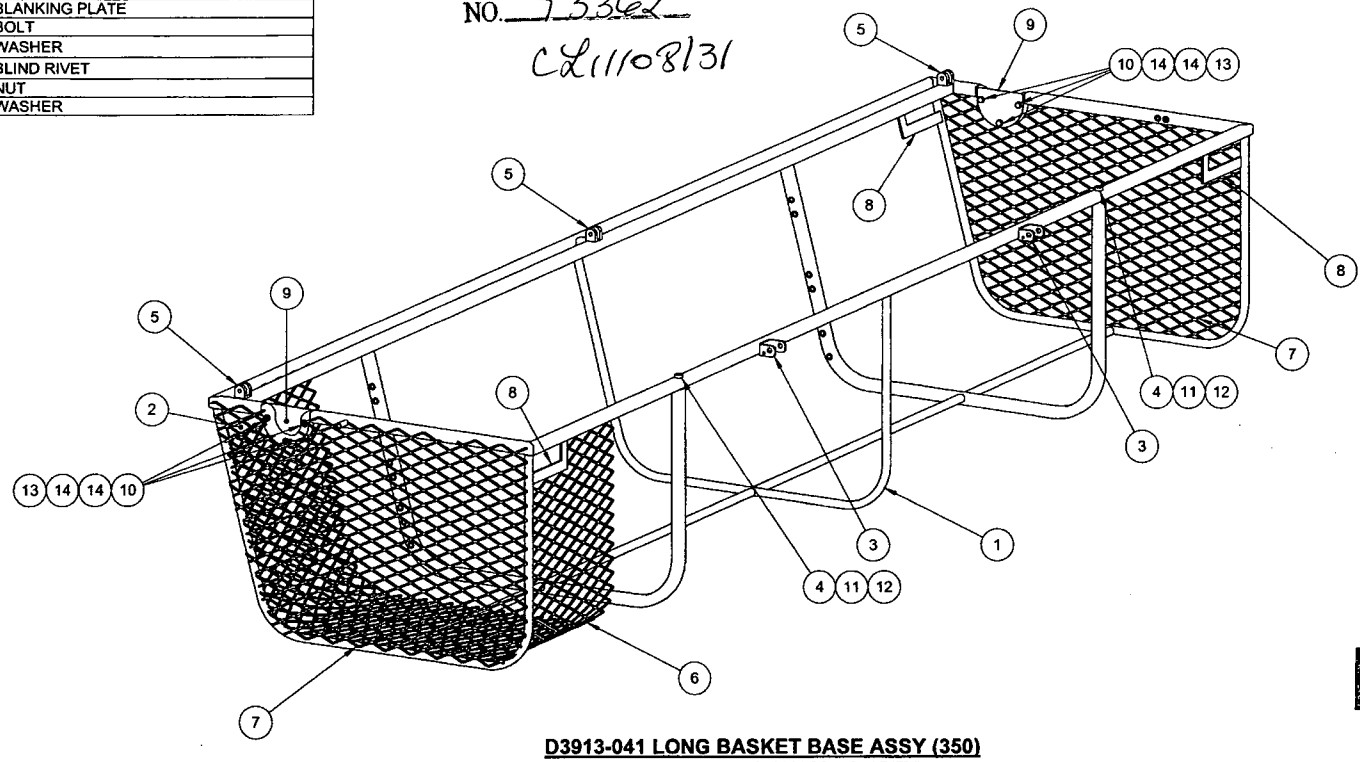

RELEASED
2010-03-22

D3913-041 LONG BASKET BASE ASSY (350)
(MESH SHOWN LOCALLY FOR CLARITY)

NOTES:
1) MATERIAL: N/A
2) FINISH: POWDER COAT WHITE (4.3.5.2) PER DART QSI 005 4.3
3) TOLERANCES: PER DART QSI 018 UNLESS OTHERWISE NOTED
4) UNITS: INCHES UNLESS OTHERWISE NOTED
5) BREAK SHARP EDGES: N/A
6) IDENTIFICATION: NONE
7) WEIGHT: 43.3 lbs APPROX
8) INSTALL AFTER FINISH
9) MASK HOLES PRIOR TO POWDER COAT
10) WELD PER DART QSI 004

REV.	DESCRIPTION	BY	DATE
A	NEW ISSUE	JPH	10.03.16

DESIGN	AJS	DART AEROSPACE LTD HAWKESBURY, ONTARIO, CANADA
DRAWN	JPH	
CHECKED		DRAWING NO. D3913 — REV. A — SHEET 1 OF 6
MFG. APPR.		
APPROVED		TITLE: LONG BASKET BASE ASSY (350) — SCALE: NTS
DE APPR.		
DATE	10.03.16	

COPYRIGHT © 2010 BY DART AEROSPACE LTD
THIS DOCUMENT IS PRIVATE AND CONFIDENTIAL AND IS SUPPLIED ON THE EXPRESS CONDITION THAT IT IS NOT TO BE USED FOR ANY PURPOSE OR COPIED OR COMMUNICATED TO ANY OTHER PERSON WITHOUT WRITTEN PERMISSION FROM DART AEROSPACE LTD

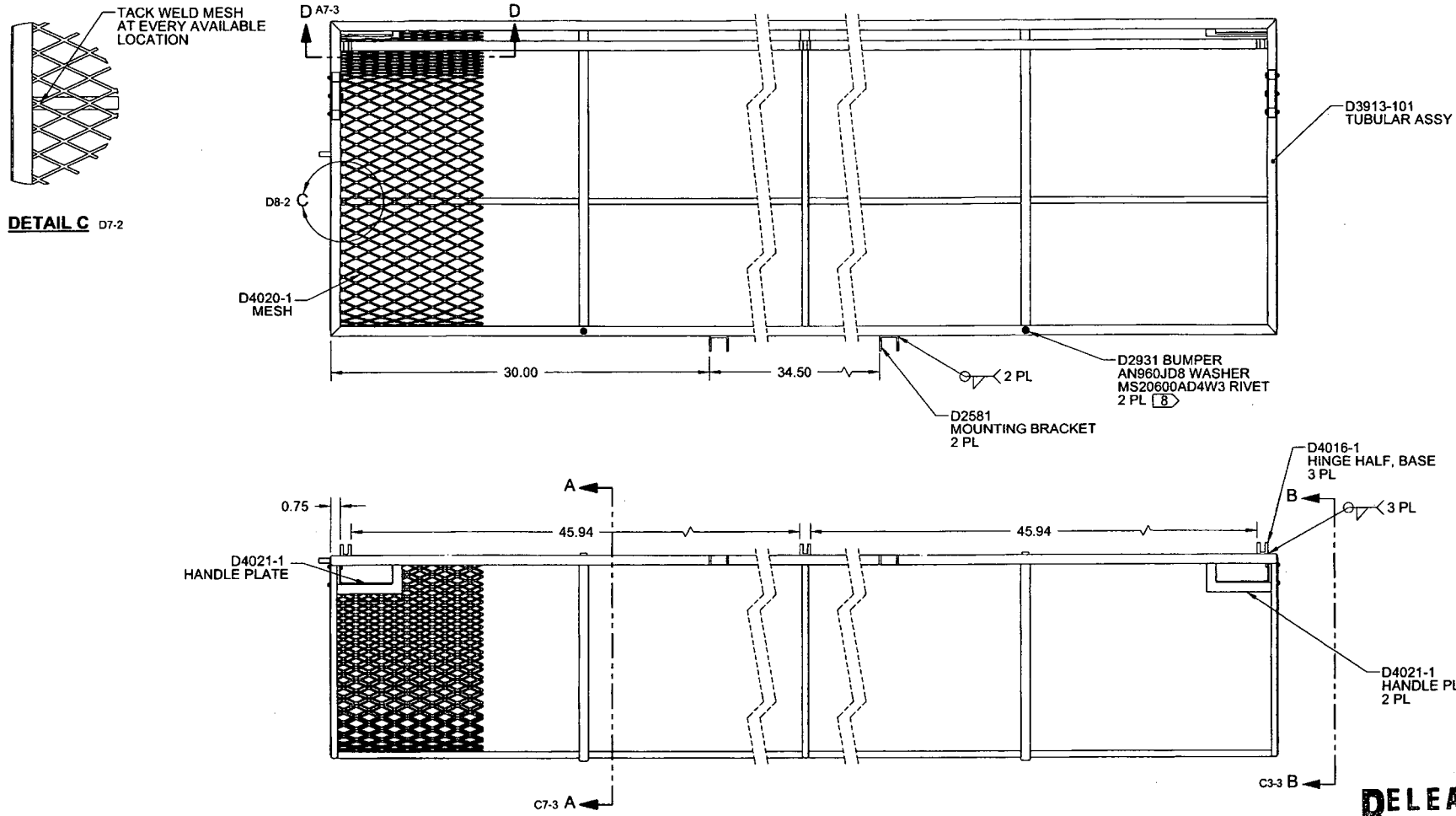

D3913-041 LONG BASKET BASE ASSY (350)
(MESH SHOWN LOCALLY FOR CLARITY)

RELEASED
2010 -05- 22

DESIGN	AJS	**DART AEROSPACE LTD** HAWKESBURY, ONTARIO, CANADA
DRAWN	JRH	
CHECKED		DRAWING NO. D3913 — REV. A — SHEET 2 OF 6
MFG. APPR.		
APPROVED		TITLE: LONG BASKET BASE ASSY (350) — SCALE: NTS
DE APPR.		
DATE	10.03.16	

COPYRIGHT © 2010 BY DART AEROSPACE LTD
THIS DOCUMENT IS PRIVATE AND CONFIDENTIAL AND IS SUPPLIED ON THE EXPRESS CONDITION THAT IT IS NOT TO BE USED FOR ANY PURPOSE, OR COPIED OR COMMUNICATED TO ANY OTHER PERSON WITHOUT WRITTEN PERMISSION FROM DART AEROSPACE LTD.

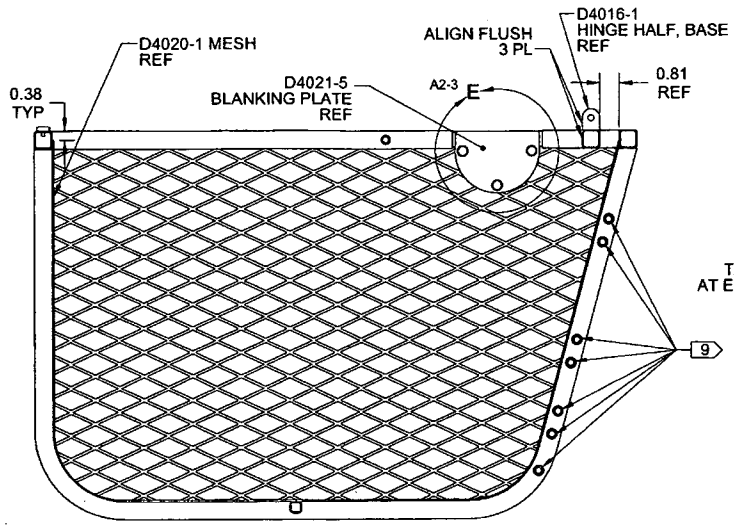

SECTION A-A A5-2

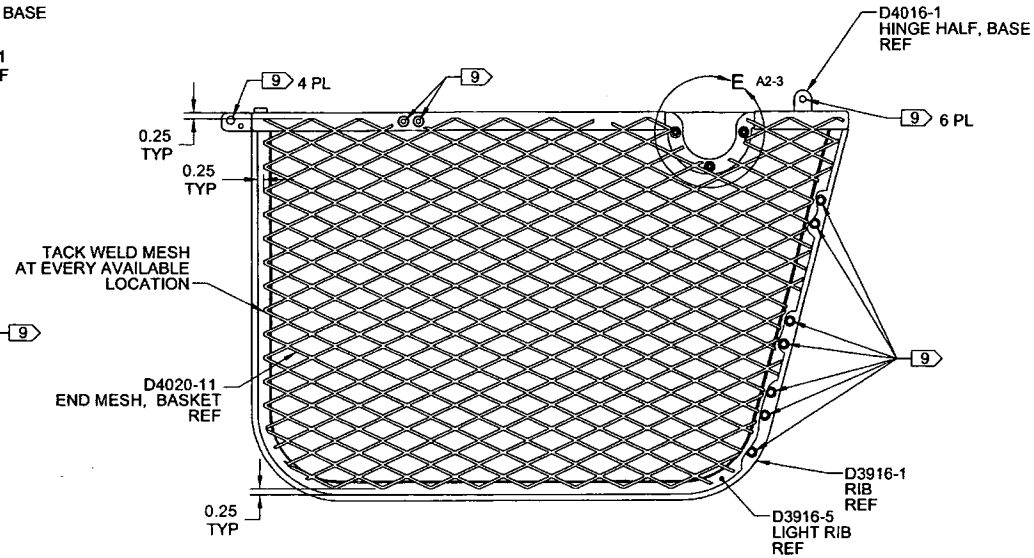

VIEW B-B A2-2

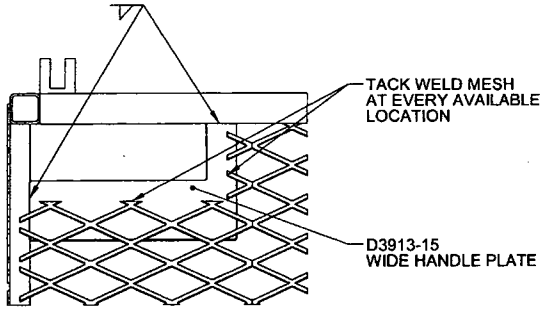

SECTION D-D D7-2
TYPICAL FOR ALL
HANDLE PLATES

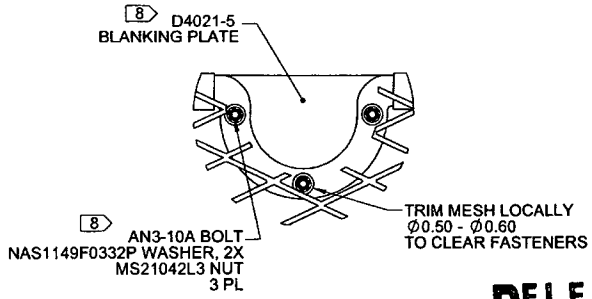

DETAIL E D2-3
D6-3

RELEASED
2010-03-22

DESIGN	AJS	**DART AEROSPACE LTD** HAWKESBURY, ONTARIO, CANADA
DRAWN	JFH	
CHECKED		DRAWING NO. D3913 — REV. A — SHEET 3 OF 6
MFG. APPR.		
APPROVED		TITLE: LONG BASKET BASE ASSY (350) — SCALE: NTS
DE APPR.		
DATE	10.03.16	

COPYRIGHT © 2010 BY DART AEROSPACE LTD
THIS DOCUMENT IS PRIVATE AND CONFIDENTIAL AND IS SUPPLIED ON THE EXPRESS CONDITION THAT IT IS NOT TO BE USED FOR ANY PURPOSE OR COPIED OR COMMUNICATED TO ANY OTHER PERSON WITHOUT WRITTEN PERMISSION FROM DART AEROSPACE LTD.

ITEM	QTY -101	P/N	DESCRIPTION
	X	D3913-101	TUBULAR ASSY (350 LONG BASKET)
1	1	D3913-1	RIB
2	1	D3913-3	RIB
3	2	D3913-7	RIB
4	1	D3913-9	HINGE RIB
5	3	D3916-5	LIGHT RIB
6	2	D3916-041	RIB ASSY
7	1	D4017-7	RIB
8	2	D4017-9	RIB
9	1	D4034-041	AFT UPPER RIB ASSY
10	1	D4034-043	FWD UPPER RIB ASSY

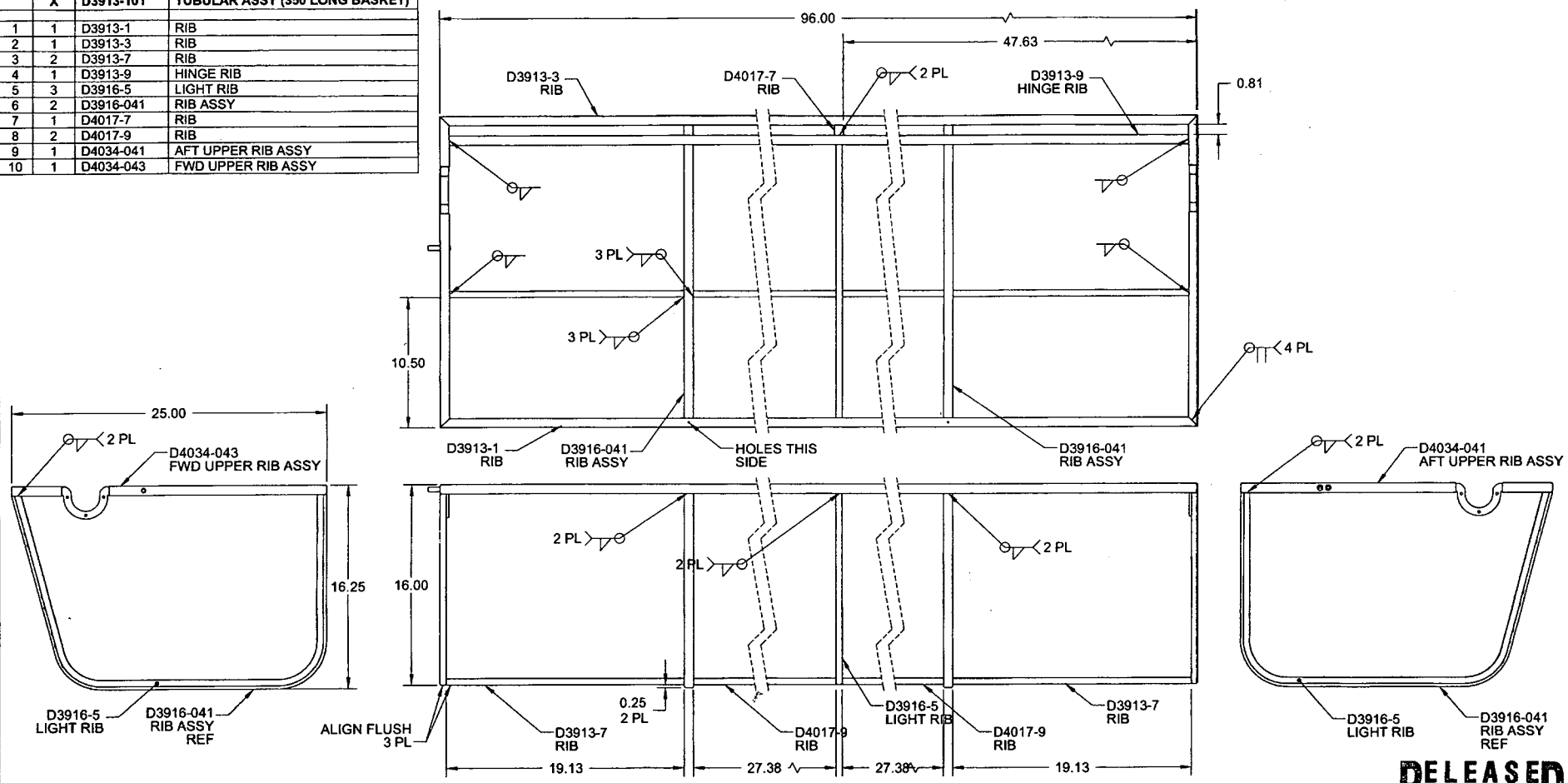

8 **D3913-101 TUBULAR ASSY (350 SHORT BASKET)**

RELEASED 2010-03-22

NOTES:
1) MATERIAL: N/A
2) FINISH: NONE
3) TOLERANCES: PER DART QSI 018 UNLESS OTHERWISE NOTED
4) UNITS: INCHES UNLESS OTHERWISE NOTED
5) BREAK SHARP EDGES: 0.005 TO 0.010 MAX
6) IDENTIFICATION: N/A
7) WEIGHT: 22.53 lbs
8) TOLERANCE FOR XX.XX DIMENSIONS ±0.06 FOR D3913-101
9) WELD PER DART QSI 004

DESIGN	AJS	DART AEROSPACE LTD HAWKESBURY, ONTARIO, CANADA
DRAWN	JRH	
CHECKED		DRAWING NO. D3913 — REV. A — SHEET 4 OF 6
MFG. APPR.		
APPROVED		TITLE — SCALE
DE APPR.		LONG BASKET BASE ASSY (350) — NTS
DATE	10.03.16	

COPYRIGHT © 2010 BY DART AEROSPACE LTD
THIS DOCUMENT IS PRIVATE AND CONFIDENTIAL AND IS SUPPLIED ON THE EXPRESS CONDITION THAT IT IS NOT TO BE USED FOR ANY PURPOSE OR COPIED OR COMMUNICATED TO ANY OTHER PERSON WITHOUT WRITTEN PERMISSION FROM DART AEROSPACE LTD.

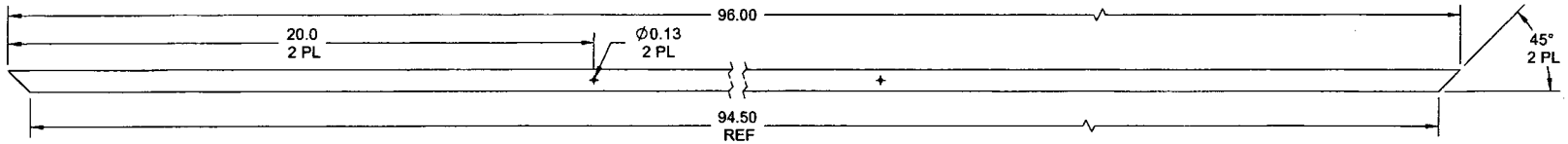

D3913-1 RIB

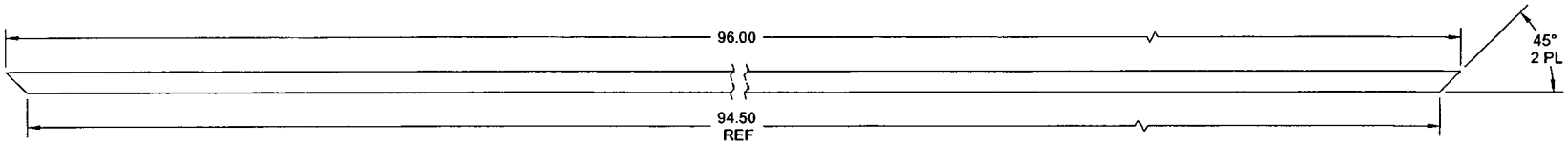

D3913-3 RIB

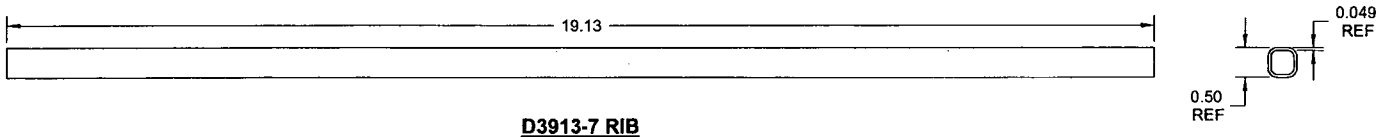

D3913-7 RIB

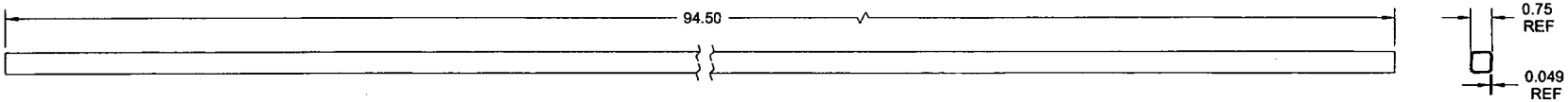

D3913-9 HINGE RIB

NOTES:
1) MATERIAL -1, -3, -9: AISI 304/316 STAINLESS STEEL SQUARE TUBE, 0.75 X 0.75 X 0.049 WALL
REF DART SPEC. M304TS0.750W.049

-7: AISI 304/316 STAINLESS STEEL SQUARE TUBE, 0.50 X 0.50 X 0.049 WALL
REF DART SPEC. M304TS0.500W.049

2) FINISH: NONE
3) TOLERANCES: PER DART QSI 018 UNLESS OTHERWISE NOTED
4) UNITS: INCHES UNLESS OTHERWISE NOTED
5) BREAK SHARP EDGES: 0.005 TO 0.010 MAX
6) IDENTIFICATION: N/A
7) WEIGHT: SEE ASSEMBLED WEIGHTS

RELEASED
2010 -03- 2 2

DESIGN	AJS	**DART AEROSPACE LTD** HAWKESBURY, ONTARIO, CANADA
DRAWN	JPH	
CHECKED		DRAWING NO. D3913 — REV. A — SHEET 5 OF 6
MFG. APPR.		
APPROVED		TITLE: LONG BASKET BASE ASSY (350) — SCALE: NTS
DE APPR.		
DATE	10.03.16	

COPYRIGHT © 2010 BY DART AEROSPACE LTD
THIS DOCUMENT IS PRIVATE AND CONFIDENTIAL AND IS SUPPLIED ON THE EXPRESS CONDITION THAT IT IS NOT TO BE USED FOR ANY PURPOSE OR COPIED OR COMMUNICATED TO ANY OTHER PERSON WITHOUT WRITTEN PERMISSION FROM DART AEROSPACE LTD

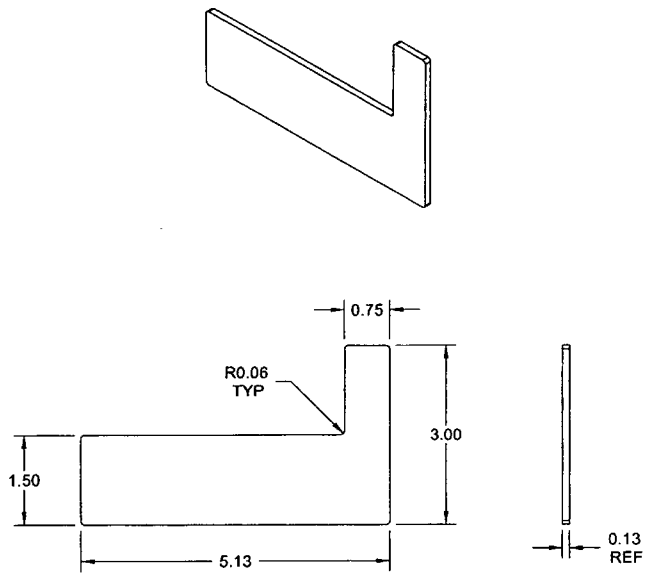

D3913-15 WIDE HANDLE PLATE

RELEASED
2010 -03- 22

NOTES:
1) MATERIAL: 304/316 STAINLESS STEEL SHEET ANNEALED 2B FINISH,
PER MIL-S-5059 OR AMS 5513/5524 OR ASTM A240 OR ASME SA240
REF DART SPEC M304S11GA
2) FINISH : NONE
3) TOLERANCES: PER DART QSI 018 UNLESS OTHERWISE NOTED
4) UNITS: INCHES UNLESS OTHERWISE NOTED
5) BREAK SHARP EDGES: 0.005 TO 0.010 MAX
6) IDENTIFICATION: N/A
7) WEIGHT: 0.31 lbs

DESIGN	AJS	**DART AEROSPACE LTD** HAWKESBURY, ONTARIO, CANADA
DRAWN	JRH	
CHECKED		DRAWING NO. D3913 — REV. A — SHEET 6 OF 6
MFG. APPR.		
APPROVED		TITLE: LONG BASKET BASE ASSY (350) — SCALE: NTS
DE APPR.		
DATE	10.03.16	

COPYRIGHT © 2010 BY DART AEROSPACE LTD
THIS DOCUMENT IS PRIVATE AND CONFIDENTIAL AND IS SUPPLIED ON THE EXPRESS CONDITION THAT IT IS NOT TO BE USED FOR ANY PURPOSE OR COPIED OR COMMUNICATED TO ANY OTHER PERSON WITHOUT WRITTEN PERMISSION FROM DART AEROSPACE LTD.

$$\begin{array}{r} 1 \\ 11 \\ 11 \\ 7 \\ 8 \\ \hline 37 \end{array}$$